ARTECTA

User Manual V1

1. Product Description

The Havana and Cartago Dropper Series are 24 V DC, IP62 LED strips for indoor and outdoor installation. They are suitable for mounting in an open aluminum profile. The Dropper Series are available in various color temperatures and as RGB, and RGBW options.

For complete product specifications visit the respective product page on our website www.highlite.com.

2. Safety Instructions

Important
Read and follow the instructions in this user manual before installing, operating or servicing this product.

DANGER
Installation, service and maintenance of this product shall be carried out only by qualified persons.

This product must be installed in accordance with the applicable national and international standards for electrical installations.

Improper installation may lead to hazardous situations and material damage.

3. Installation Site Requirements

Attention
The LED strips are not suitable for underwater installation. They are suitable for installation in damp locations.

The LED strips can be installed in an open aluminum profile.

Make sure that the mounting surface is clean and smooth, and free of grease or silicone oil.

Make sure that the mounting surface is thermally conductive and provides good heat dissipation.

If the LED strips are installed outdoors, make sure that they are not exposed to the effects of the weather. The LED strips are not UV resistant.

Do not install the LED strips:
- under water
- at a place where the LED strips are exposed to direct sunlight
- near heat-generating devices
- in closed aluminum profiles.

Do not install the LED strips in environments with highly volatile substances, such as sulfur, chlorine, bromine and VOC. This will reduce the life of the LED chips.

Make sure that the LED strips are installed at a place with:
- ambient temperature between -20 °C and 50 °C
- sufficient airflow.

©2024 Artecta. All rights reserved.

No part of this document may be copied, published or otherwise reproduced without the prior written consent of Highlite International.

III

Design and product specifications are subject to change without prior notice.

For the latest version of this document and other language versions, please visit our website www.highlite.com or contact us at service@highlite.com.

Highlite International B.V. • Vestastraat 2 • 6468 EX • Kerkrade • the Netherlands

4. Handling

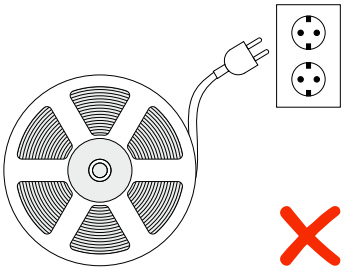

Do not connect the LED strip to electrical power supply when the LED strip is on the reel or when it is tightly coiled. This will damage the LEDs.

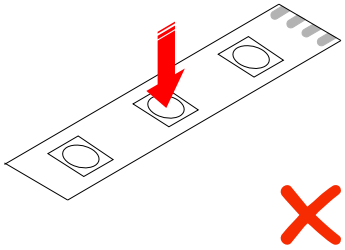

Do not put excessive pressure on the LED chips.

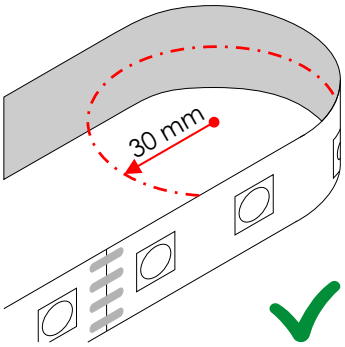

You can bend the LED strip only along the vertical axis. The maximum bending radius is 30 mm.

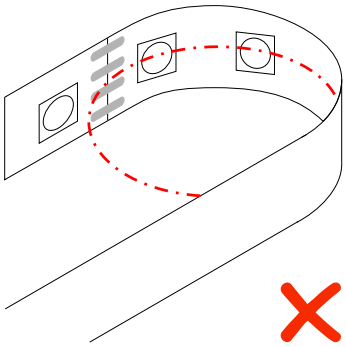

Do not bend the LED strip with the LEDs on the inside.

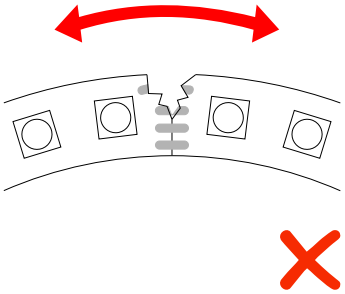

Do not bend the LED strip on the horizontal plane.

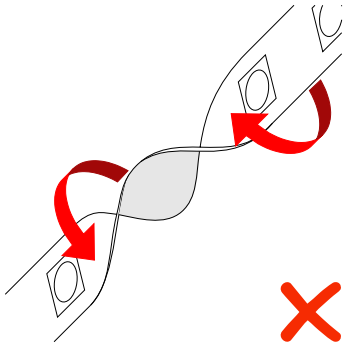

Do not twist the LED strip.

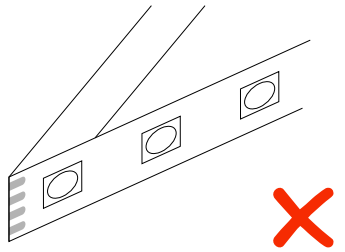

Do not fold or break the LED strips.

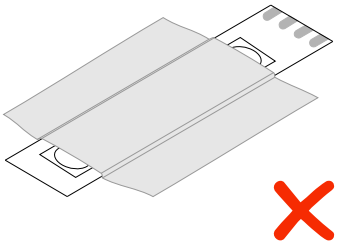

Do not cover the LED strips with any material during operation.

5. Installation

WARNING
Incorrect installation can cause serious injuries and damage of property.

The installation of this product shall be carried out only by qualified persons.

Disconnect the power supply in the area where the product will be installed.

Use an SELV DC constant voltage driver to connect the LED strip to the mains.

To connect the LED strip to the controller/driver or to other LED strips use wires with sufficient cross-sectional area and current-carrying capacity.

1 Determine the location of all components.

2 Cut the LED strip at the required length.

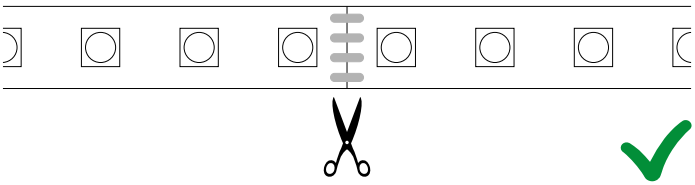

Cut the LED strip only at the marked cut line in the center of the solder pads. Make sure that the cut is made at 90°. The cutting tolerance is ±0.65 mm.

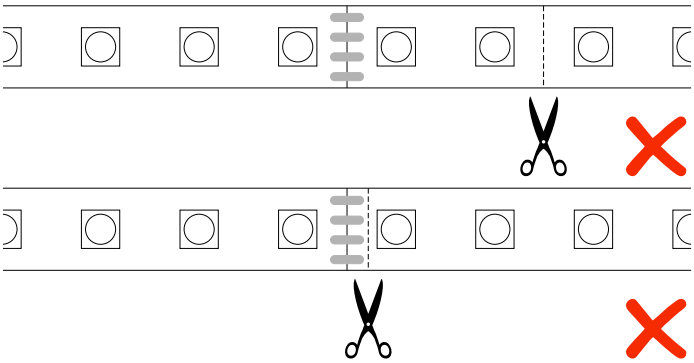

Do not cut the LED strip at any other place. This will damage the internal circuit and the LEDs will not work.

3 Connect the LED strips if multiple LED strips are used.

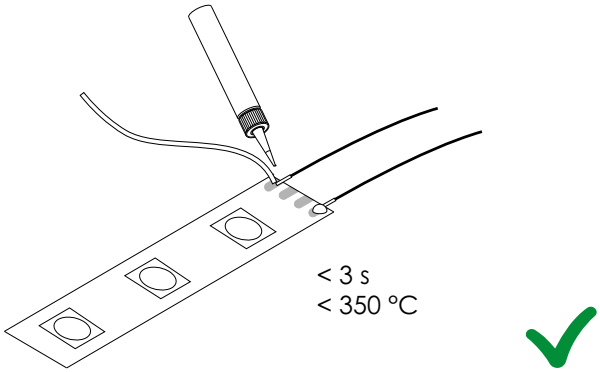

Do not solder for a period longer than 3 seconds. Make sure that the soldering temperature is lower than 350 °C.

Make sure that the polarity is correct when connecting multiple LED strips.

4 Remove the protective tape from the LED strip. Be careful not to cause damage to the electronic components.

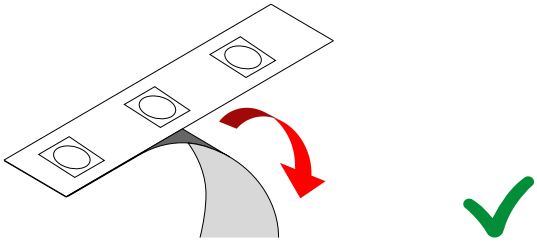

5 Attach the LED strip to the mounting surface or to the aluminum profile.

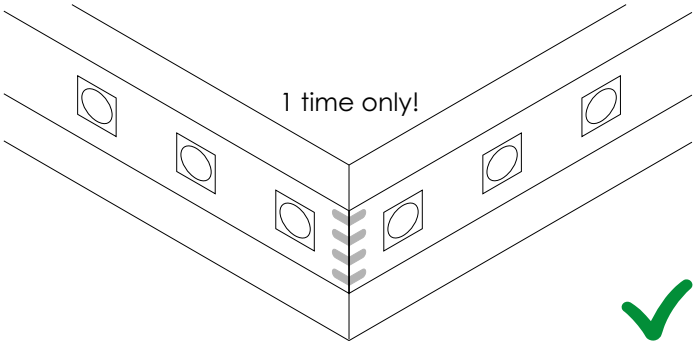

Fold the LED strip at the marked cut line to mount the LED strip at a corner. Do not fold the LED strip more than once!

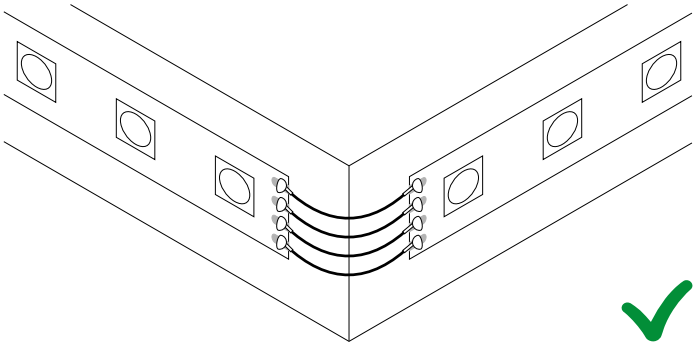

You can also solder wires between 2 LED strips at a corner.

6 Connect the LED strip to the controller/driver. Make sure that the polarity is correct.

Setup example:

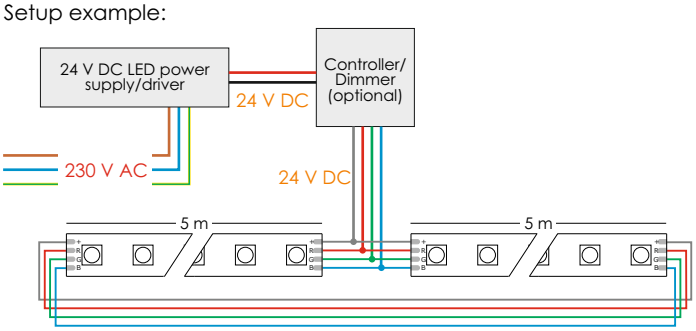

6. Troubleshooting

Change in brightness or color temperature of the LEDs	Make sure that the run is not too long. Voltage drop can cause the LEDs' brightness to decrease.
Some LEDs do not work	Make sure that all connections are correct. Make sure that the LED strip is not sharply bent. This can cause components to detach from the circuit board.
The LEDs are flickering	Make sure that the driver/power supply is compatible. Make sure that all connections are correct.

7. Maintenance

Attention
Do not use detergent and/or water to clean this product.

This product is maintenance-free.

Use dry compressed air to clean the LED strip if necessary.

Do not use alcohol, solvents, detergents and/or water. This will damage the LED strip.

8. Disposal

Dispose of this product by handing it to the respective collection point for recycling of electrical and electronic equipment. Do not dispose of with the household waste.