ARTECTA

# User Manual V2

## 1. Product Description

The Havana and Cartago Jade Series are 24 V DC, IP68 LED strips for indoor and outdoor installation. They are suitable for mounting in an open aluminum profile. The Jade Series are available in various color temperatures and as RGBW options.

The LED strips are delivered with a mounting set, which consists of end caps, clips, self-tapping screws, and a tube with silicone glue.

For complete product specifications visit the respective product page on our website www.highlite.com.

## 2. Safety Instructions

**Important**
**Read and follow the instructions in this user manual before installing, operating or servicing this product.**

**DANGER**
**Installation, service and maintenance of this product shall be carried out only by qualified persons.**

This product must be installed in accordance with the applicable national and international standards for electrical installations.

Improper installation may lead to hazardous situations and material damage.

## 3. Installation Site Requirements

**Attention**
**The LED strips are suitable for installation in damp or wet locations. Not suitable for installation under water (> 1 m).**

The LED strips can be installed in an open aluminum profile.

If the LED strips are cut and resealed they may not be installed under water.

Make sure that the mounting surface is clean and smooth, and free of grease or silicone oil.

Make sure that the mounting surface is thermally conductive and provides good heat dissipation.

If the LED strips are installed outdoors, make sure that they are not exposed to the effects of the weather. The LED strips are not UV-resistant.

Do not install the LED strips:

- under water at a depth greater than 1 m
- at a place where the LED strips are exposed to direct sunlight
- near heat-generating devices
- in closed aluminum profiles.

Do not install the LED strips in environments with highly volatile substances, such as sulfur, chlorine, bromine and VOC. This will reduce the life of the LED chips.

Make sure that the LED strips are installed at a place with:

- ambient temperature between -20 °C and 50 °C
- sufficient airflow.

©2024 Artecta. All rights reserved.

No part of this document may be copied, published or otherwise reproduced without the prior written consent of Highlite International.

Design and product specifications are subject to change without prior notice.

For the latest version of this document and other language versions, please visit our website www.highlite.com or contact us at service@highlite.com.

Highlite International B.V. • Vestastraat 2 • 6468 EX • Kerkrade • the Netherlands



## 4. Handling

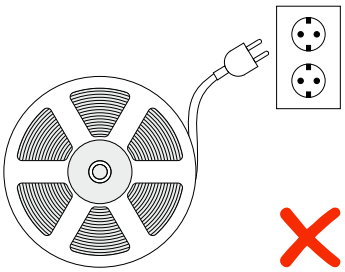

Do not connect the LED strip to electrical power supply when the LED strip is on the reel or when it is tightly coiled. This will damage the LEDs.

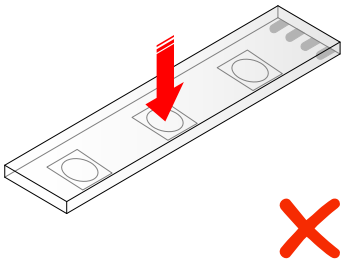

Do not put excessive pressure on the LED chips.

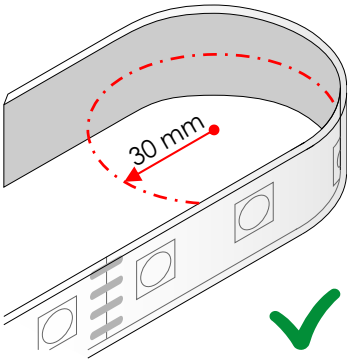


You can bend the LED strip only along the vertical axis. The maximum bending radius is 30 mm.

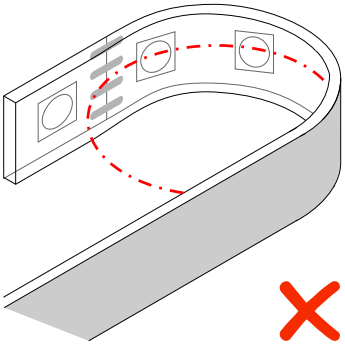

Do not bend the LED strip with the LEDs on the inside.

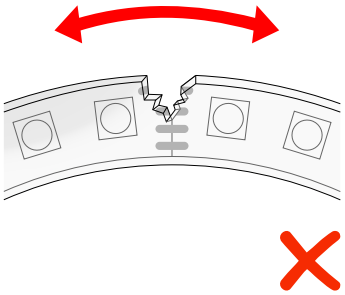

Do not bend the LED strip on the horizontal plane.

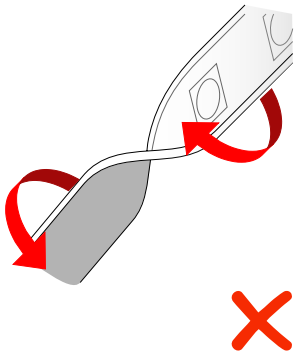

Do not twist the LED strip.

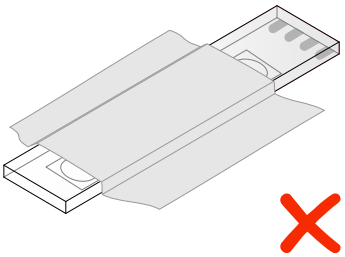

Do not cover the LED strip with any material during operation.

## 5. Installation

**WARNING**
**Incorrect installation can cause serious injuries and damage of property.**

The installation of this product shall be carried out only by qualified persons.

Disconnect the power supply in the area where the product will be installed.

Use an SELV DC constant voltage driver to connect the LED strip to the mains.

To connect the LED strip to the controller/driver or to other LED strips use wires with sufficient cross-sectional area and current-carrying capacity.

## 1 Determine the location of all components.

## 2 Cut the LED strip at the required length.

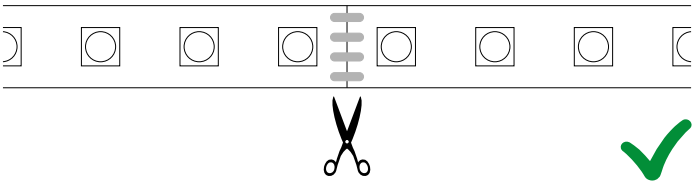

Cut the LED strip only at the marked cut line in the center of the solder pads. Make sure that the cut is made at 90°. The cutting tolerance is ±0.65 mm.

Do not cut the LED strip at any other place. This will damage the internal circuit and the LEDs will not work.

## 3 Seal the cut part.

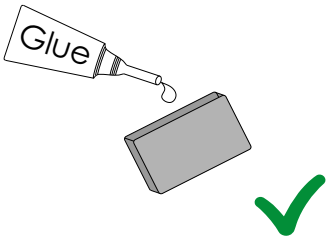


Fill in the end cap with silicone glue.

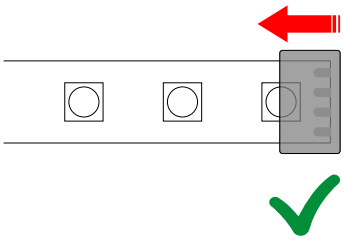

Put the end cap on the cut part and press to seal it.

## 4 Connect the cables.

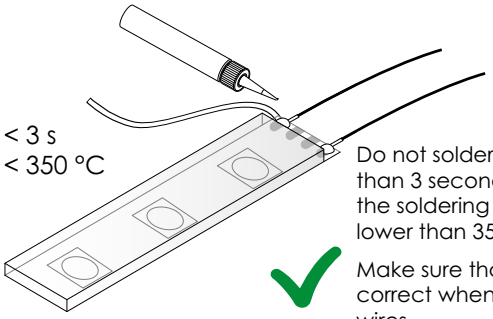

< 3 s
< 350 °C

Do not solder for a period longer than 3 seconds. Make sure that the soldering temperature is lower than 350 °C.

Make sure that the polarity is correct when connecting the wires.

## 5 Seal the end of the LED strip.

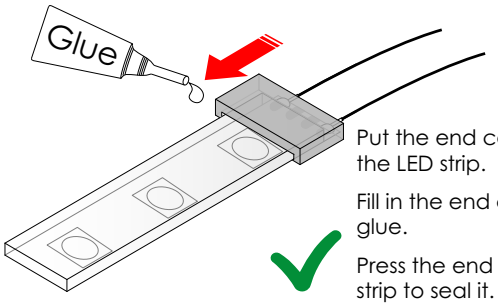


Put the end cap on the end of the LED strip.

Fill in the end cap with silicone glue.

Press the end cap to the LED strip to seal it.

## 6 Remove the protective tape from the LED strip. Be careful not to cause damage to the electronic components.

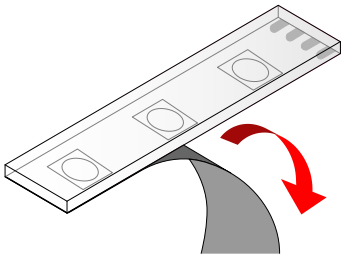

## 7 Attach the LED strip to the mounting surface or to the aluminum profile.

## 8 Fix the LED strips to the mounting surface with the clips.

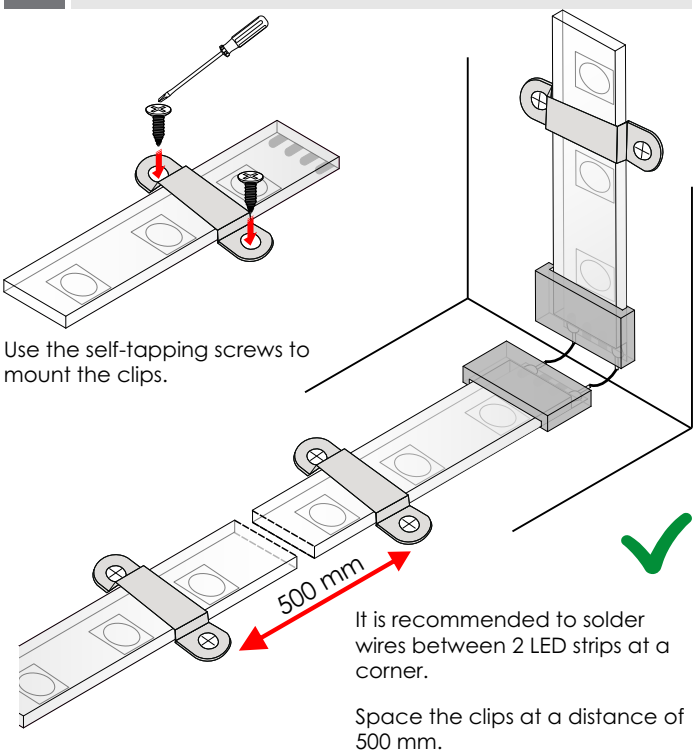


Use the self-tapping screws to mount the clips.

It is recommended to solder wires between 2 LED strips at a corner.

Space the clips at a distance of 500 mm.

## 9 Connect the LED strip to the controller/driver. Make sure that the polarity is correct.

Setup example:

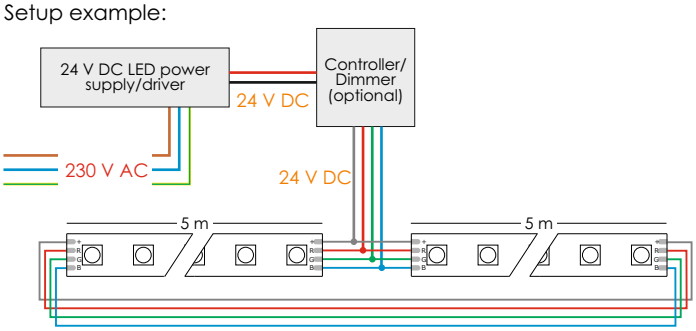


## 6. Troubleshooting

| | |
|---|---|
| Change in brightness or color temperature of the LEDs | Make sure that the run is not too long. Voltage drop can cause the LEDs' brightness to decrease. |
| Some LEDs do not work | Make sure that all connections are correct. Make sure that the LED strip is not sharply bent. This can cause components to detach from the circuit board. |
| The LEDs are flickering | Make sure that the driver/power supply is compatible.<br>Make sure that all connections are correct. |

## 7. Maintenance

**Attention**
**Do not use detergent and/or water to clean this product.**

This product is maintenance-free.

Use dry compressed air to clean the LED strip if necessary.

Do not use alcohol, solvents, detergents and/or water. This will damage the LED strip.

## 8. Disposal

Dispose of this product by handing it to the respective collection point for recycling of electrical and electronic equipment. Do not dispose of with the household waste.